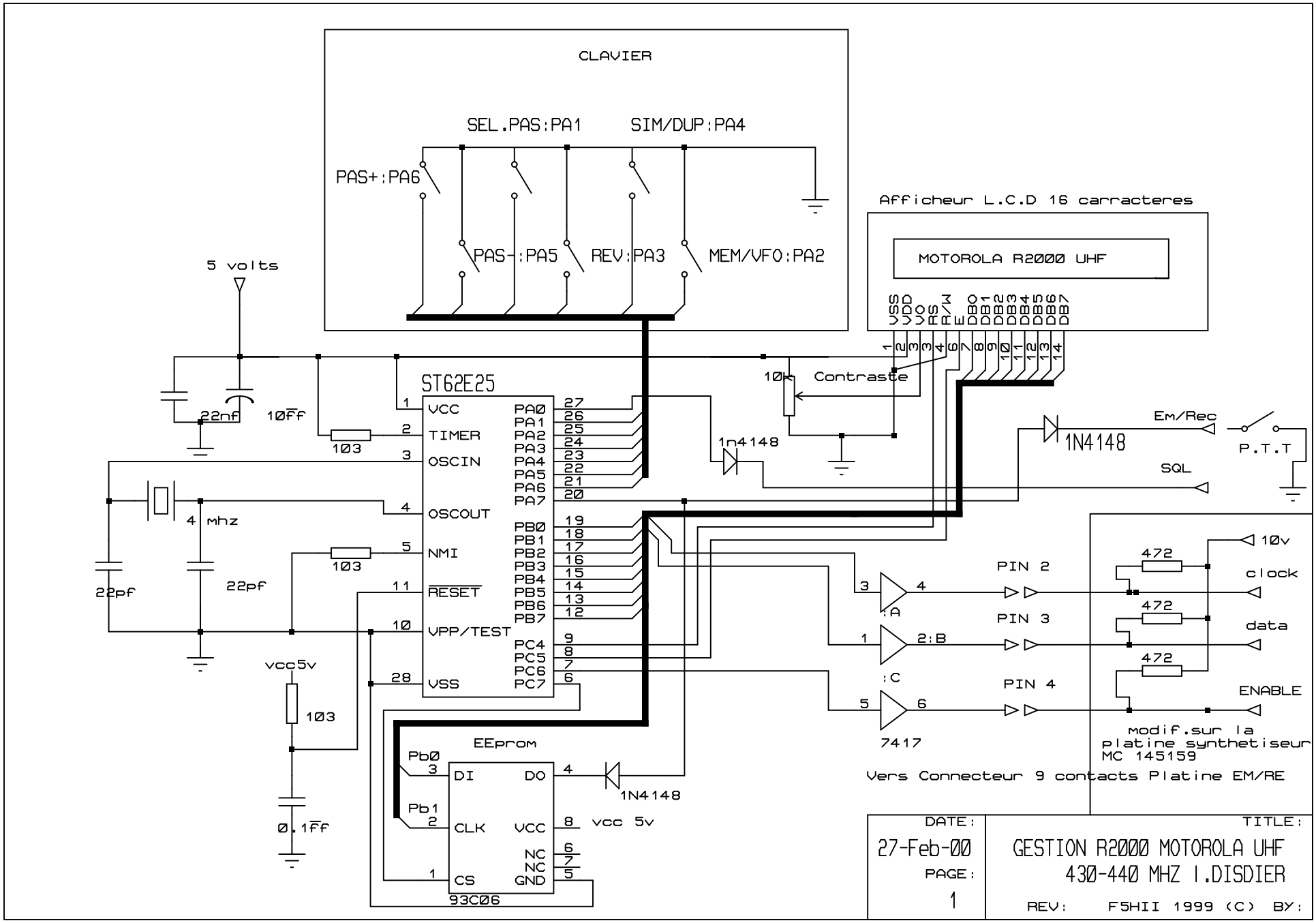
CLAVIER
SEL.PAS:PA1
SIM/DUP:PA4
PAS+:PA6
PAS-:PA5
REV:PA3
MEM/VFO:PA2
Afficheur L.C.D 16 carracteres
MOTOROLA R2000 UHF
VSS VDD VO RS R/W E DB0 DB1 DB2 DB3 DB4 DB5 DB6 DB7
5 volts
ST62E25
VCC
TIMER
OSCIN
OSCOUT
NMI
RESET
VPP/TEST
VSS
PA0 PA1 PA2 PA3 PA4 PA5 PA6 PA7
PB0 PB1 PB2 PB3 PB4 PB5 PB6 PB7
PC4 PC5 PC6 PC7
22nf
10ff
103
4 mhz
22pf
22pf
103
10k
Contraste
1n4148
1N4148
Em/Rec
P.T.T
SQL
:A
:C
2:B
7417
PIN 2
PIN 3
PIN 4
472
472
472
10v
clock
data
ENABLE
modif.sur la
platine synthetiseur
MC 145159
Vers Connecteur 9 contacts Platine EM/RE
vcc5v
103
0.1ff
EEprom
Pb0
Pb1
DI
CLK
CS
DO
VCC
NC
NC
GND
93C06
1N4148
vcc 5v
DATE:
27-Feb-00
PAGE:
1
TITLE:
GESTION R2000 MOTOROLA UHF
430-440 MHZ I.DISDIER
REV:
F5HII 1999 (C) BY: